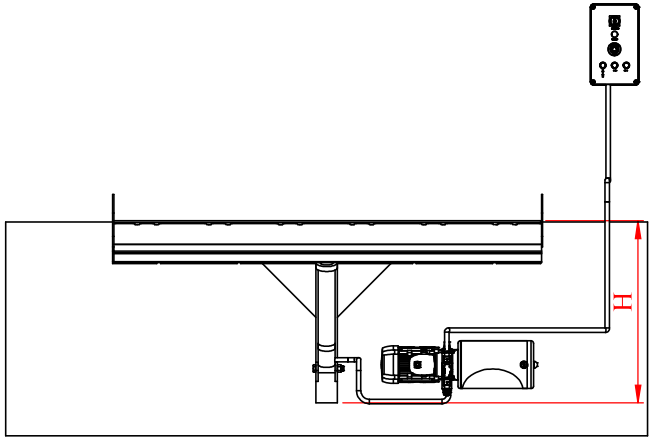

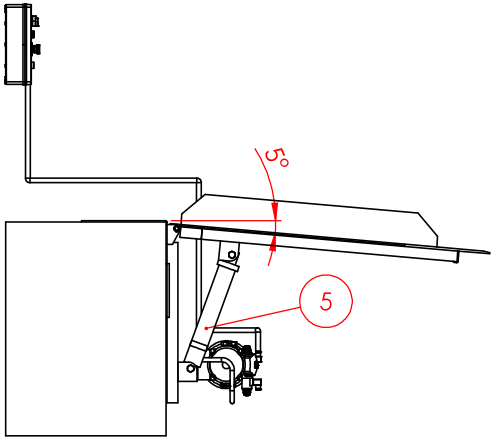

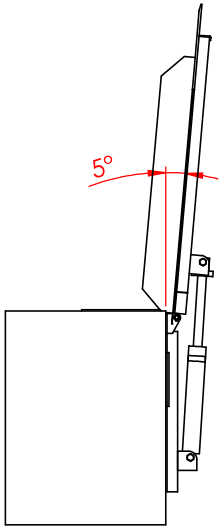

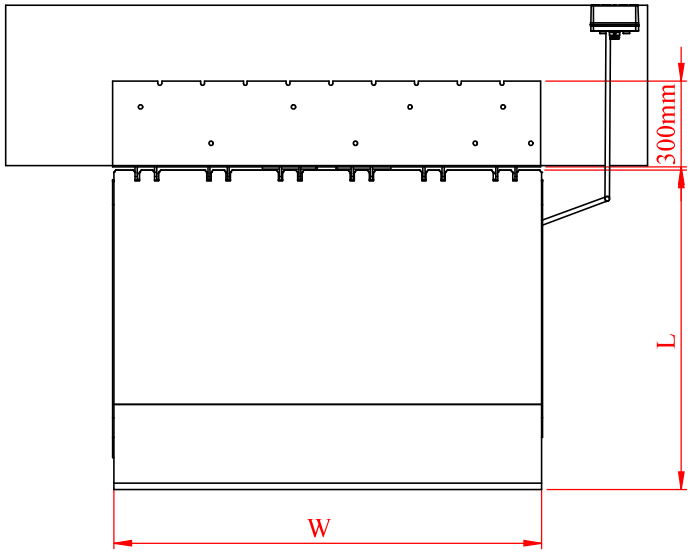

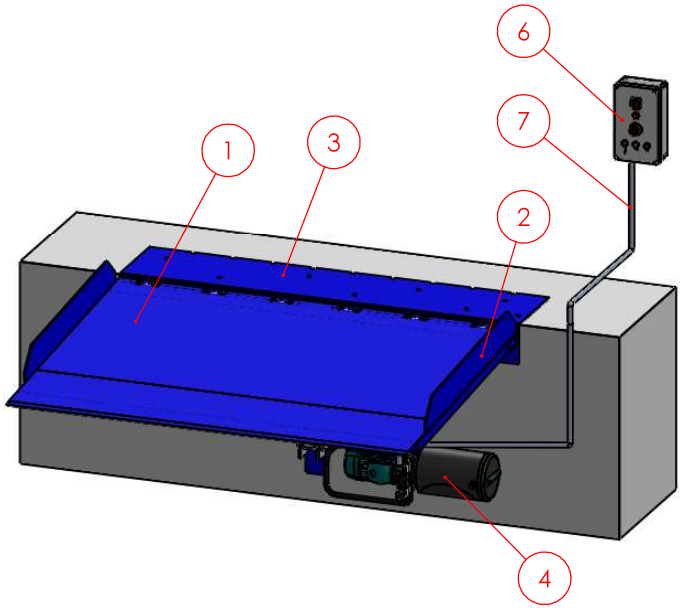

Parts of Vertical Dock leveller		
ITEM	QTY	DESCRIPTION
1	1	Main platform
2	2	Side Barrier
3	1	Mounting plate
4	1	Hyraulic unit
5	1	Hydraulic cylinder
6	1	Control panel
7	1	Cable

Dimensions		
	Standart	Customer
W (Width) mm	2000 mm	
L (Length) mm	1500 mm	
H(Height) mm	800 mm	
C (Capasity) mm	7000 kg	

Project Name and Details

Vertical Dock Leveller

	NAME	DATE
DRAWN BY		.../.../....
CONFIRM		.../.../....
PROJECT MANAGER		.../.../....
QUANTITY		
WEIGHT		
SCALE : 1:25		A3